2024

Hawle-E1+ Flanged valve



made for generations.

Hawle-E1+

Flanged valve

The Hawle-E1+ Gate Valve is the result of our consequent improvement of the well proven Elypso Valve. The O-ring bush is fixed in the all side epoxy powder coated bonnet by a bayonet connection. Wedge guides made of POM guarantee lowest wear and lowest closing torques.

- DN 50 — 300
- PN 10 | PN 16
- Application: potable water
- According to EN 1074-1 und -2
- Short and long face-to-face dimension

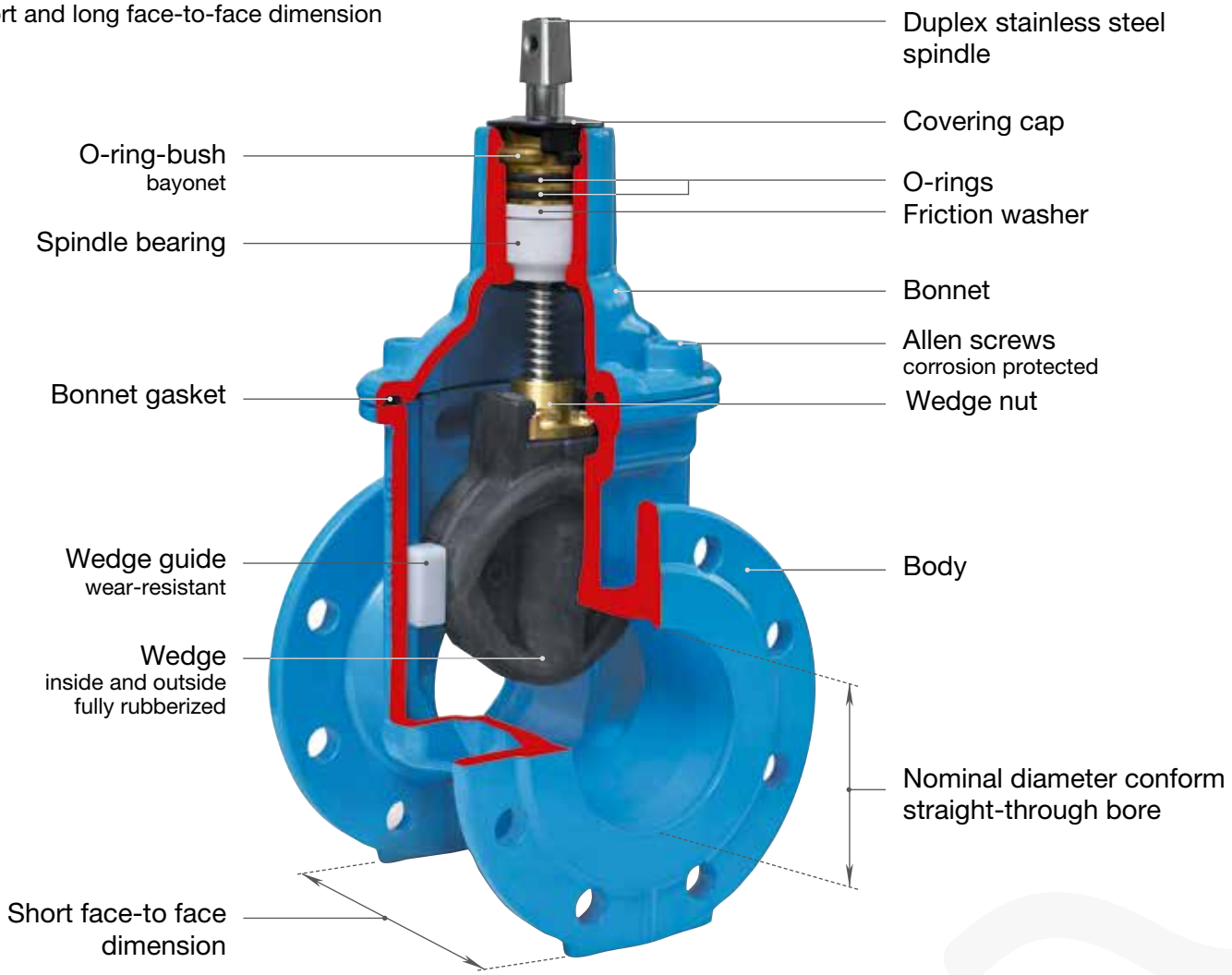

Hawle - quality guarantee

hawle Q 10 YEARS Quality Guarantee

ÖVGW GEPRÜFT

* No. 4000E1+ DN 50 — 200, short face-to-face dimension ÖVGW approved

All illustrations, technical data, dimensions (in mm) and weights (all weights specified in kg) are non-binding.
Subject to change.

Range of products

Specifications

No. 4000E1+*
No. 4700E1+

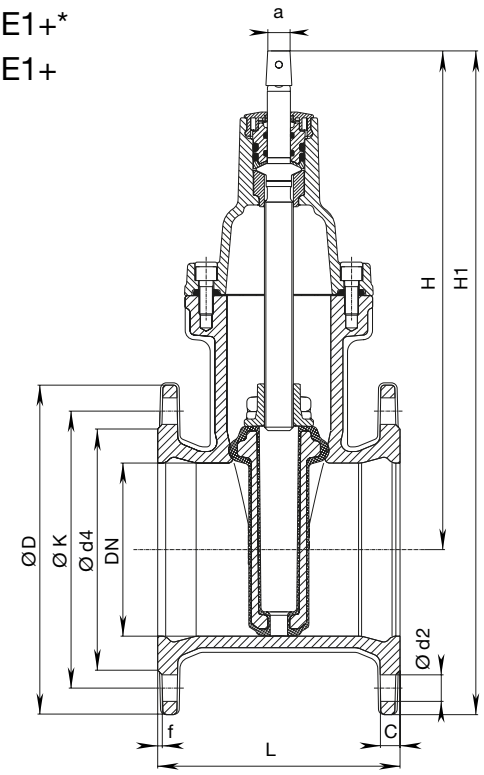

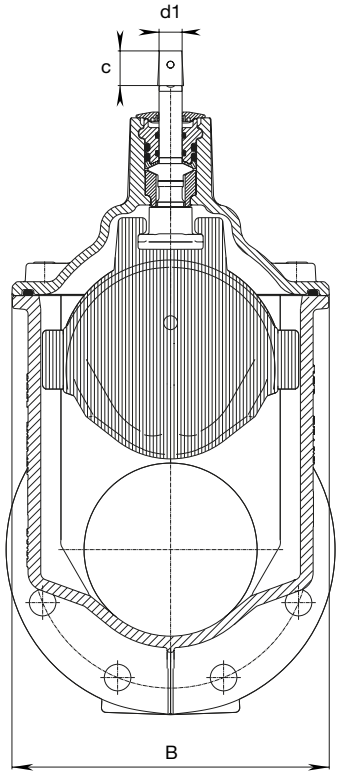

DN	MOP (PN)	Flange					Bolts			Spindle			Valve					Weight	
		Ø D	C	Ø K	Ø d4	f	Qty	Thread	Ø d2	a	c	Ø d1	H	H1	L short	L long	B	short	long
50	10 16	165	18	125	98	5	4	M 16	19	14,8	30	18	230	313	150	250	135	8,8	10,7
65	10 16	185	18	145	118	5	4	M 16	19	17,3	30	20	298	390	170	270	172	13,5	16,9
80	10 16	200	18	160	133	5	8	M 16	19	17,3	30	20	305	405	180	280	172	14,5	19,0
100	10 16	220	18	180	153	5	8	M 16	19	19,3	30	20	339	449	190	300	203	18,5	25,2
125	10 16	250	17	210	183	4	8	M 16	19	19,3	30	20	420	545	200	325	275	30,5	36,7
150	10 16	285	17	240	209	4	8	M 20	23	19,3	30	20	432	575	210	350	275	34,0	42,9
200	10 16	340	19,5	295	264	4,5	8 12	M 20	23	24,3	38	25	534	704	230	400	345	54,6 53,0	68,0
250	10 16	400	21,5	350	318	4,5	12	M 20 M 24	23 28	27,3	38	32	626	826	250	-	422	80,5 82,0	- -
300	10 16	455	24	400	371	5,5	12	M 20 M 24	23 28	27,3	38	32	709	937	270	-	506	125,0 142,4	- -

Benefits Hawle-E1+ valve

- **O-ring bush** with bayonet connection
- Wear less **wedge guides**
- **100% corrosion protection**
- Inside and outside **fully rubberized wedge**
- Suitable for **cleaning with a badger**
- **Duplex** stainless steel spindle

Accessories and spare parts



Handwheel
No. 7800



Operating cap
No. 2156, No. 2157



Extension spindles
No. 9000A, No. 9500A
No. 9000, No. 9500



Surface boxes
No. 1750, No. 2050
No. 2051K



Base plate
No. 3481K



Spindle extensions
No. 7820, No. 7825

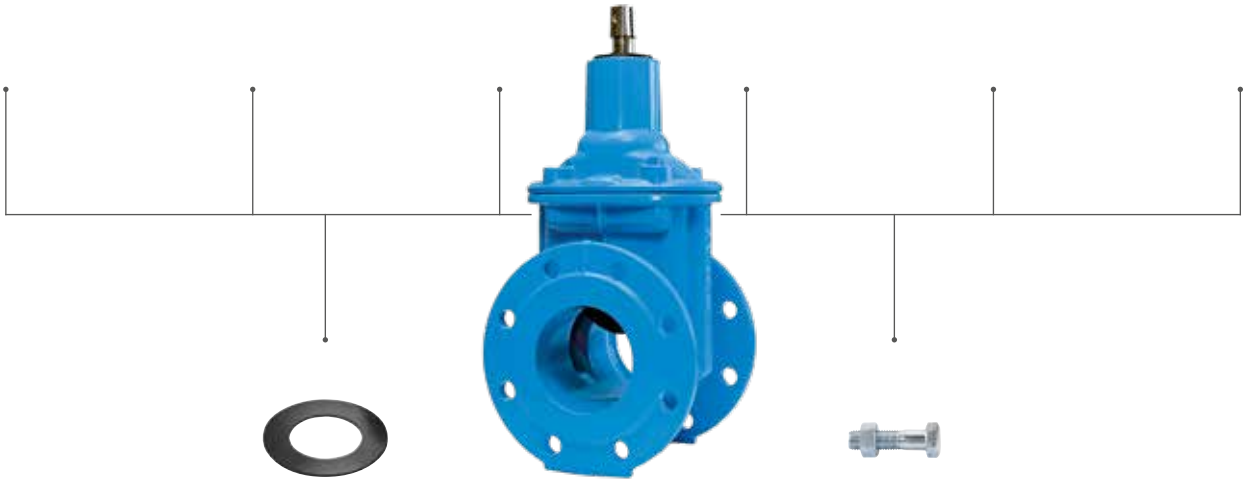

Flat gasket
No. 3390, No. 3470

Bolts
No. 8810, No. 8830
No. 8840

E. Hawle Armaturenwerke GmbH
Wagrainer Straße 13 | 4840 Vöcklabruck | Austria
+43 7672 72 576-0 +43 7672 78 464 hawle@hawle.at
hawle.com

Art.-Nr.: HAW-420-EN

Printed on recycled, chlorine-free bleached paper and aging.