Nr. 4806

Knife gate valve with loose flanges | PN 10



Standards

Construction features

Resilient seated gate valve with smooth, straight-through bore

- The ideal gate valve for the replacement of existing valves and new construction of pressure lines
- Spindle lies outside the flow medium
- Reliable and leak-proof shut-off function by knife gate and O-ring seal
- Can be used for installation in plants and underground installation
- Restraint connection
- Bonnet can be replaced "under pressure" (up to DN 200)
- Flat gaskets are already contained in the conical seals

Nr. 4806

Knife gate valve with loose flanges | PN 10

Materials

All cast iron parts	• Ductile iron: EN-GJS-400-15 according to EN 1563 • Epoxy powder coated inside and outside: According to EN 14901 and DIN 3476-1 in due consideration of the RAL-GZ 662 quality and testing requirements: - coating thickness: min. 250 µm - zero porosity: min. 3000 V spark test - adhesion: min. 16 N/mm 2
Spindle and knife gate	Stainless steel

Nr. 4806

Knife gate valve with loose flanges | PN 10

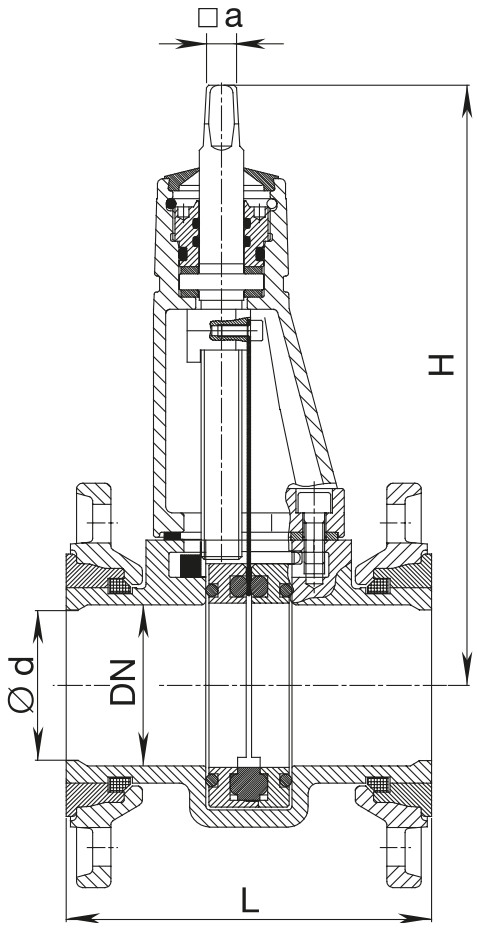

DN	PN	Weight	H	L	Ød	Spindle
						□a
DN80	PN10	14.13	295	180	76	14,8
DN100	PN10	17	320	190	96	14,8
DN125	PN10	27	424	200	121	17,3
DN150	PN10	32	410	210	145	17,3
DN200	PN10	45.9	530	230	172	19,3
DN250	PN10	150	832	250	247	27,3
DN300	PN10	178	807	270	297	27,3