Nr. 4000E3

E3 gate valve, flange, short

PN 10 | PN 16, EN 558-1 GR 14



Standards

- Resilient seated gate valve according to EN 1171, EN 1074-1 and EN 1074-2 with smooth, straight-through bore

Flanges sized in accordance with EN 1092-2, drilled according to

- EN 1092-2 | PN 16: Standard up to DN 150
- EN 1092-2 | PN 10 or PN 16: from DN 200
- **Please specify on order - other standards on request**
- Face-to-face length acc. EN 558 GR 14
- Also available with four-hole bore according to DIN 1882 (selected dimensions)

Construction features

Resilient seated gate valve with smooth, straight-through bore

Hawle E3:

- Double bayonet O-ring carrier is connecting the spindle to the bonnet, allowing a fully encased, uniform epoxy powder coated bonnet for further improved corrosion protection
- Spindel made of Duplex stainless steel
- Wedge guide made of wear resistant POM material in load optimized design minimizes attrition and ensures lowest torque actuation
- Wedge is flexible and fully linked in vulcanized elastomer to the wedge nut. This snug fit dampens vibration during opening and closing of the wedge
- Wedge nut has a long thread length allowing significantly higher torques than the standard before breaking
- O-rings, lip-seals mounted in the bonnet are replaceable under operating pressure
- Extended edge protection to avoid damages during transport, storage and assembly
- Sliding disks and ball bearing assure low friction performance of the spindle
- 100% suitable for buried installations
- Suitable for cleaning with a cleaning pig
- One extension spindle for several dimensions
- Suitable for operation by automatic actuators
- Easy refitting for position indicator and automatic actuators on the standard bonnet (DN 50 to DN 200)
- To set-up an actuator or a position indicator, remove the centering flange and insert position indicator or actuator with adapter (DN 250 bis DN 600)

Standard version: without handwheel and extension spindle
Design versions:

- for actuator: No. 4000ELE3,
- with position indicator: No. 4000STE3,
- for seawater: No. 4002E3, No. 4702E3
- with bevel gearing: No. 4000EWE3
- Further special versions: on request

for DN 500 / DN600:

- version with bypass (DN50) available
- Ventilation and exhausting; small amounts o fair in the bonnet

Nr. 4000E3

E3 gate valve, flange, short

PN 10 | PN 16, EN 558-1 GR 14

Materials

Body **bonnet** **centering flange**	• Ductile iron: EN-GJS-400-15 according to EN 1563 • Epoxy powder coated inside and outside: According to EN 14901 and DIN 3476-1 in due consideration of the RAL-GZ 662 quality and testing requirements: - coating thickness: min. 250 µm - zero porosity: min. 3000 V spark test - adhesion: min. 16 N/mm 2
Wedge	• Ductile iron: EN-GJS-400-15 according to EN 1563 • DN 50: made of brass CuZn21Si3P with vulcanized elastomer all-over according to EN 681-1 • Wedge nut of non-ferrous metal flexible and fully linked to the wedge by vibration damping vulcanized elastomer
Wedge nut	• Brass: CuZn21Si3P • Wedge nut thread length > 1,2 x spindle diameter.
Wedge guide **sliding discs** **centering ring**	POM
Spindle	• Duplex stainless-steel spindle with rolled thread and flat-rolled anti-friction surface • non-rising spindle made of Duplex stainless steel 1.4162 (PREN value ~ 26) • spindle polished in the area of the O-ring sealing
O-ring carrier	• Brass CuZn40Pb2 • with double bayonet connection (DN 50 - DN 200)
O-rings **bonnet gasket** **centering flange gasket** **lip seals** **wiper ring**	EPDM elastomer acc. to EN 681-1
Covering cap **edge protection ring**	PE (Polyethylen)

Nr. 4000E3

E3 gate valve, flange, short

PN 10 | PN 16, EN 558-1 GR 14

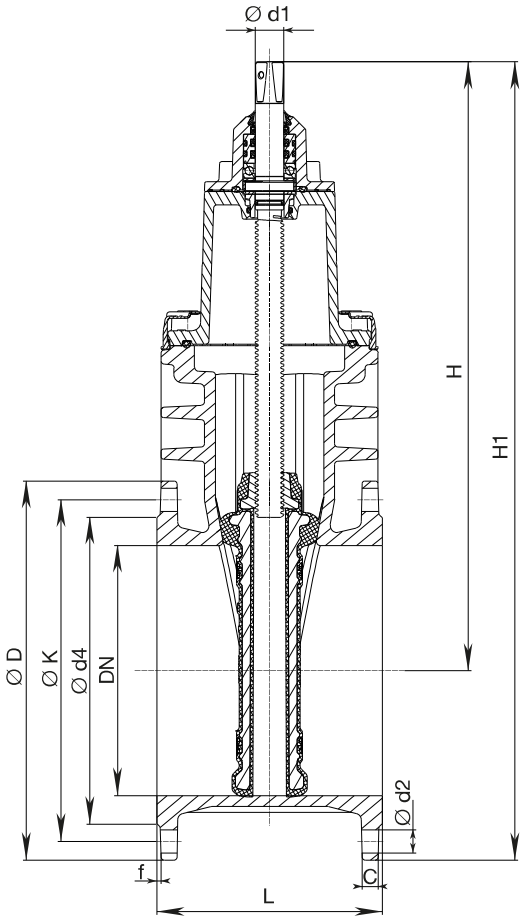

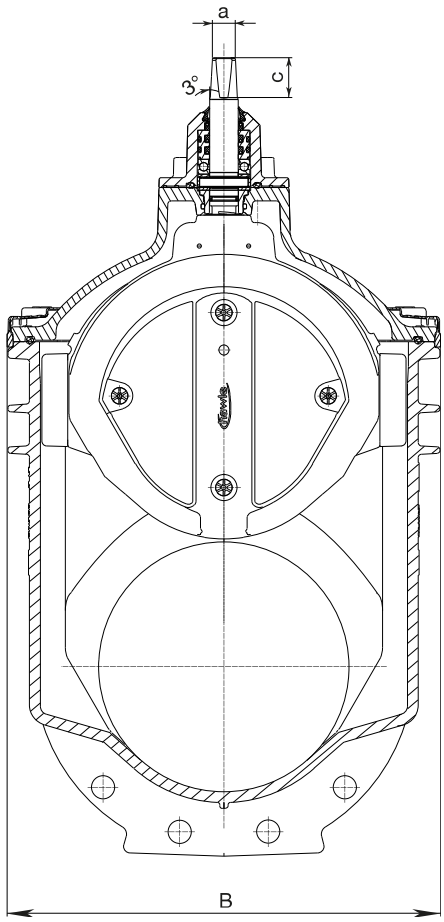

DN	PN	Weight	H	H1	L	B	Bolts			Flange					Spindle			
							Qty.	Thread	Ød2	Ød	C	ØK	Ød4	f	□a	c	w°	Ød1
DN50	PN16	9.8	234	316,5	150	143	4	M 16	19	165	19	125			14,8	33	3°	20,5
DN65	PN16	15.2	305	397,5	170	180	4	M 16	19	185	19	145			17,3	38	3°	24
DN80	PN16	16.2	312,5	412,5	180	180	8	M 16	19	200	19	160			17,3	38	3°	24
DN100	PN16	20.5	343	453	190	212	8	M 16	19	220	19	180			19,3	39	3°	24
DN125	PN16	33	421	546	200	289	8	M 16	19	250	19	210			19,3	39	3°	26
DN150	PN16	36.8	433	576	210	289	8	M 20	23	285	19	240			19,3	39	3°	26
DN200	PN10	60.2	541	711	230	356	8	M 20	23	340	20	295			24,3	48	3°	30
	PN16						12											
DN250	PN10	98.4	649	849	250	432	12	M 20	23	400	22	350	319	3	27,3	48	3°	34
	PN16	101.6						M 24	28			355						
DN300	PN10	150.8	731	959	270	518	12	M 20	23	455	24,5	400	367	4	27,3	48	3°	34
	PN16	149.8						M 24	28			410						
DN350	PN16	205.5	816	1076	290	604	16	M 24	28	520	26,5	470	427	4	27,3	48	3°	34
	PN10							M 20	23			460						
DN400	PN10	265.4	925	1215	310	687	16	M 24	28	580	28	515	477	4	32,3	55	3°	44
DN400	PN16	260	925	1215	310	687	16	M 27	31	580	28	525	477	4	32,3	55	3°	44
DN600	PN10	686	1306	1726	390	944	20	M 27	31	840	36	725	720	5	36,3	66		50
DN600	PN16	690	1306	1726	390	944	20	M 33	37	840	36	770	720	5	36,3	66		50
DN500/500	PN10	476	1149	1507	350	800	20	M 24	28	715	31,5	620	582	4	36,3	66		50

Nr. 4000E3

E3 gate valve, flange, short

PN 10 | PN 16, EN 558-1 GR 14

DN	PN	Weight	H	H1	L	B	Bolts			Flange					Spindle		
							Qty.	Thread	Ød2	Ød	C	ØK	Ød4	f	□a	c	w°	Ød1
DN500/500	PN16	471.5	1149	1507	350	800	20	M 30	34	715	31,5	650	582	4	36,3	66		50