Nr. 4000E1+

E1+ gate valve with flanges, short, with Duplex spindle

EN 558-1 GR 14, PN10 | PN 16

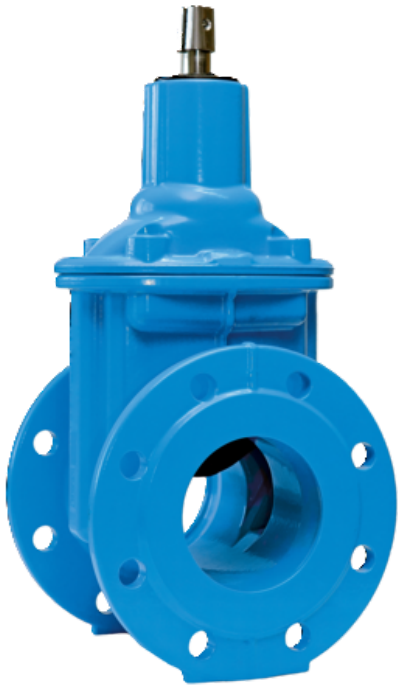

Standards

- Resilient seated gate valve according to EN 1171, EN 1074-1 and EN 1074-2 with smooth, straight-through bore
- All parts in contact with water are suitable for potable water!
- Face-to-face length acc. EN 558 GR 14

Flanges sized in accordance with EN 1092-2, drilled according to

- EN 1092-2 | PN 16: Standard up to DN 150
- EN 1092-2 | PN 10 or PN 16: from DN 200
- **Please specify on order - other standards on request**

Construction features

E1+:

- DUPLEX stainless steel spindle
- Wedge guide with high glide characteristics; load-optimised design guarantees lowest wear and lowest closing torques
- Wedge nut allows high torque load by large dimensioning of the required thread length Spindle bearing attached in bonnet by bayonet connection
- O-rings on all sides mounted in corrosion-proof material
- Friction washers guarantee smooth spindle guiding
- 100% suitable for underground installation

Nr. 4000E1+

E1+ gate valve with flanges, short, with Duplex spindle

EN 558-1 GR 14, PN10 | PN 16

Materials

Body **bonnet**	• Ductile iron: EN-GJS-400-15 according to EN 1563 • Epoxy powder coated inside and outside: According to EN 14901 and DIN 3476-1 in due consideration of the RAL-GZ 662 quality and testing requirements: - coating thickness: min. 250 µm - zero porosity: min. 3000 V spark test - adhesion: min. 16 N/mm 2
Wedge	Wedge of ductile iron EN-GJS-400-15 acc. to EN1563 inside and outside fully rubberized, with vulcanized elastomer rubber according to EN681, KTW 270
Wedge guide	POM (Polyoxymethylene), wear-resistant
Wedge nut	Brass, constructed according to EN1171
Spindle	• Stainless steel with rolled thread and polished, O-ring slide faces, bearing made of POM • E1: Duplex stainless steel 1.4162
O-ring bush	Brass, attached in bonnet by bayonet connection, anti-rotation, multiple O-ring sealing
O-rings **bonnet gasket**	Elastomer
Screws	Allen screws, corrosion protected by being encrased into the body with an enclosing gasket and wax
Covering cap	Dirt protection of the spindle bearing, made of PE
Friction Washers **Spindle bearing**	POM (Polyoxymethylene)

Nr. 4000E1+

E1+ gate valve with flanges, short, with Duplex spindle

EN 558-1 GR 14, PN10 | PN 16

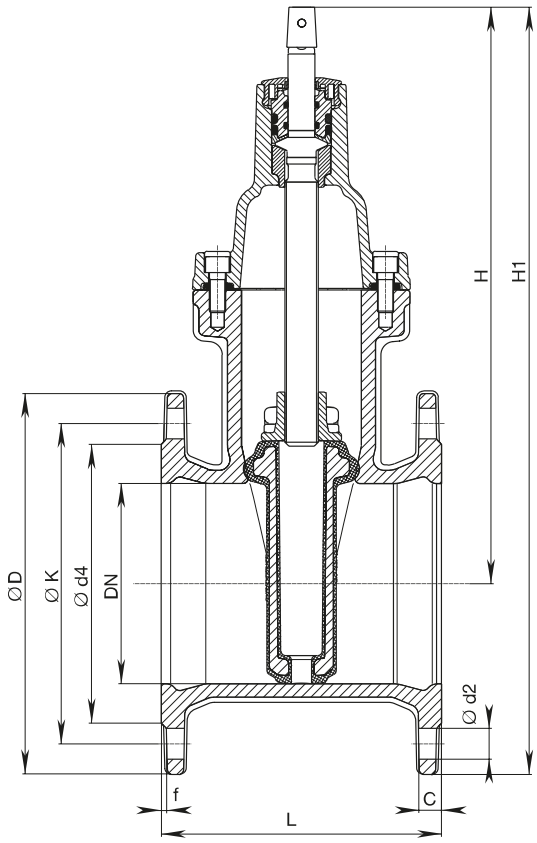

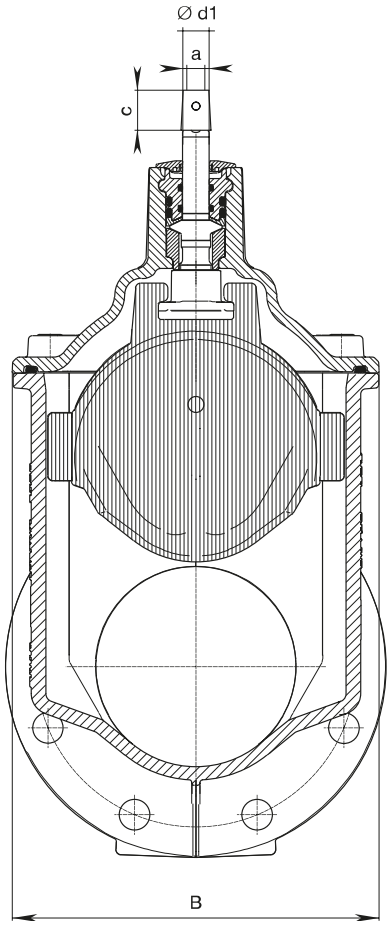

DN	PN	Weight	H	H1	L	B	Bolts		Flange					Spindle		
							Qty.	Thread	Ød2	Ød	C	ØK	Ød4	f	□a	c	Ød1
DN50	PN16	8.654	230	313	150	135	4	M 16	19	165	18	125	98	5	17,3	30	20
DN65	PN16	13.5	298	390	170	172	4	M 16	19	185	18	145	118	5	17,3	30	20
DN80	PN16	14.5	305	405	180	172	8	M 16	19	200	18	160	133	5	17,3	30	20
DN100	PN16	18.45	339	449	190	203	8	M 16	19	220	18	180	153	5	19,3	30	20
DN125	PN16	31.2	420	545	200	275	8	M 16	19	250	17	210	183	4	19,3	30	20
DN150	PN16	34.4	432	575	210	275	8	M 20	23	285	17	240	209	4	19,3	30	20
DN200	PN10	54.4	534	704	230	345	8	M 20	23	340	19,5	295	264	4,5	24,3	38	25
	PN16	55.6					12										
DN250	PN10	81.8	626	826	250	422	12	M 20	23	400	21,5	350	318	4,5	27,3	38	32
	PN16	82						M 24	28								
DN300	PN10	126.4	709	937	270	506	12	M 20	23	455	24	400	371	5,5	27,3	38	32
	PN16	142.4						M 24	28								